WKS — 1283/2004

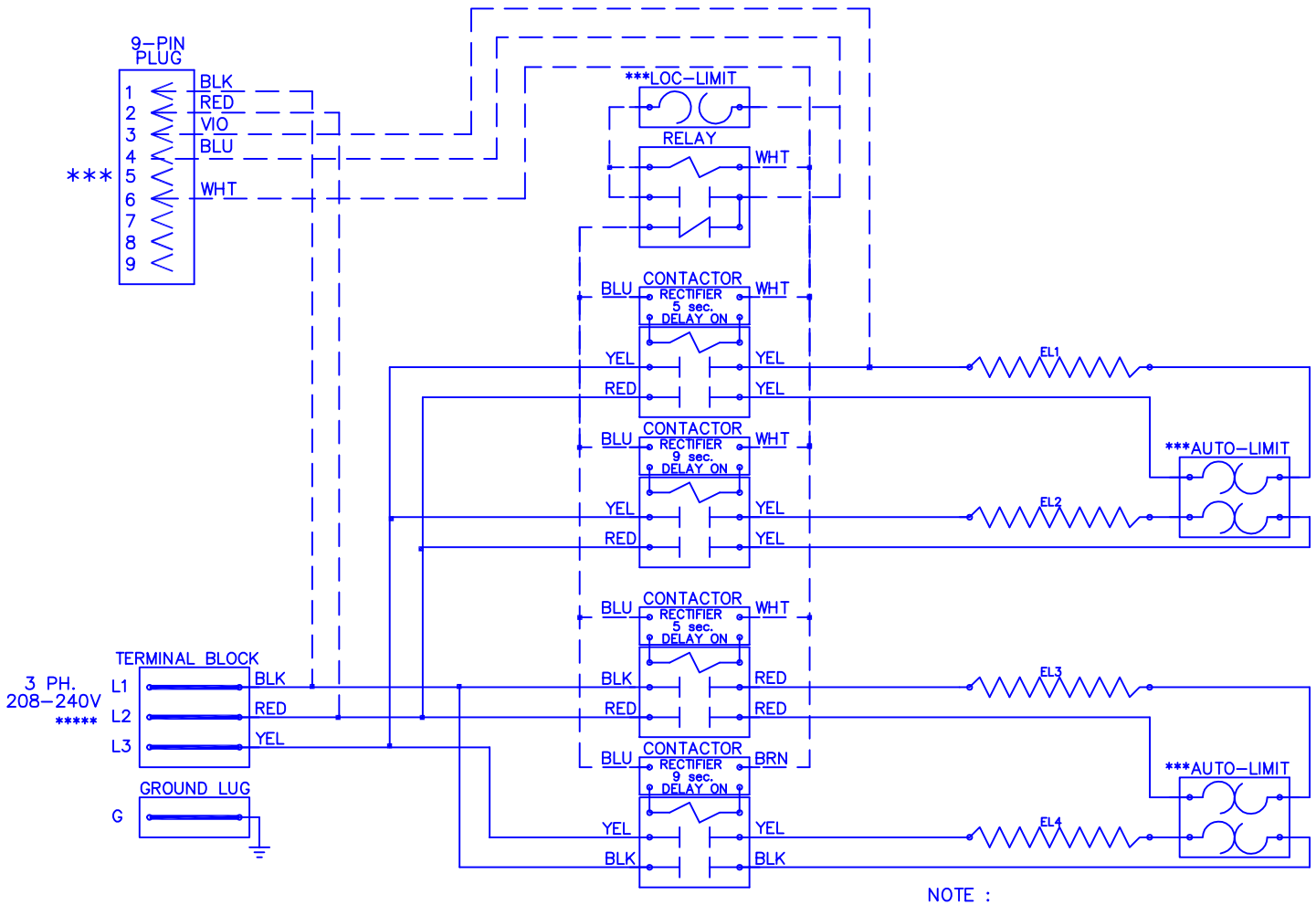

Model	WKS-1283/2004
Serial #	
Tag -	
Kilowatts	12.8/17.0
Volts-Ph-Hz	208/240/3/\/60
Control Volts	24.0
Steps	1
Heater Amps	35.5/40.9
Circuit Breakers	N/A

NOTE :
CAUTION - Contactors utilize 22-28VDC coils with AC to DC rectifiers. Do not use contactor without rectifier. Replace with factory authorized parts only.
-Contactor must always utilize AC-DC Rectifier with Time Delay as shown.
** Replace Auto-Reset with Therm-O-Disc type 60TX11-L165.
*** Replace Lock-Out Limit with 36TXV12 - 150°C To Reset Lock-Out Limit, Cycle Power To The Heater With Either The Circuit Breaker Or The Thermostat.
**** 24VAC, Class 2 power source must not exceed 26.4VAC under any primary input voltage condition per UL/NEC.
***** Power supply wiring per NEC & Local Codes. Suitable for at least 75°C.
Use copper conductor wiring only.

Control Wiring — — — — — —
Power Wiring ————————
Field Wiring ————————

WKS2004

Rev. by : M. REEVES
Date : 09/28/18

WARREN TECHNOLOGY