WRX — 2005A

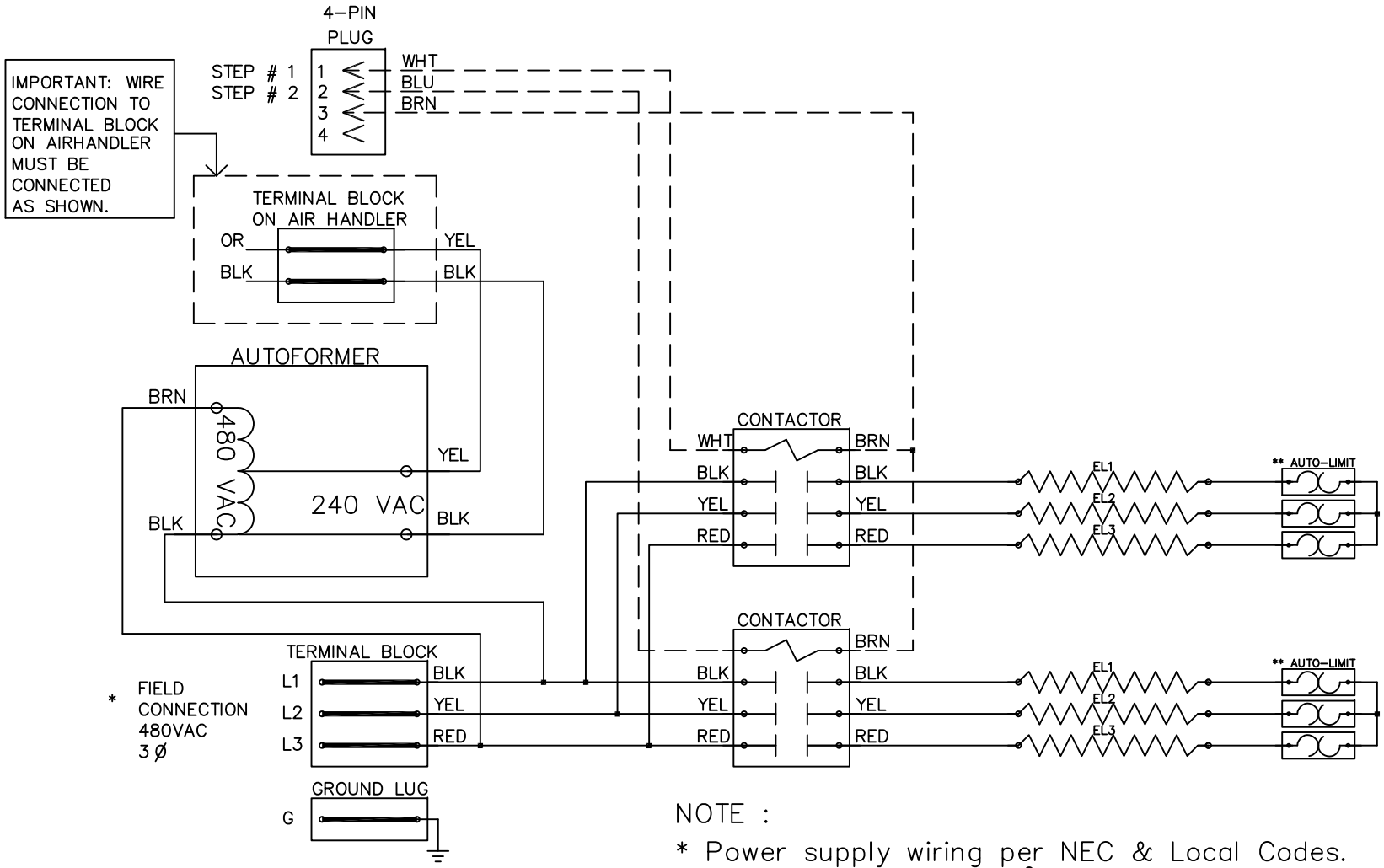

Model	WRX-2005A
Serial #	
Tag -	
Kilowatts	19.2
Volts-Ph-Hz	480 / 3Y /60
Control Volts	24.0
Steps	2
Heater Amps	23.10
Circuit Breakers	N/A

NOTE :

* Power supply wiring per NEC & Local Codes. Suitable for at least 75°C.
Use copper conductor wiring only.
** Replace Auto-Reset with Therm-O-Disc type L-150/L-333..

24VAC, Class 2 power source must not exceed 26.4VAC under any primary input voltage condition per UL/NEC.

Control Wiring - - - - - - - -
Power Wiring ————————
Field Wiring ————————

WRX2005A

Rev. by : M. REEVES
Date : 02/27/15

WARREN TECHNOLOGY