WRX — 2002BX

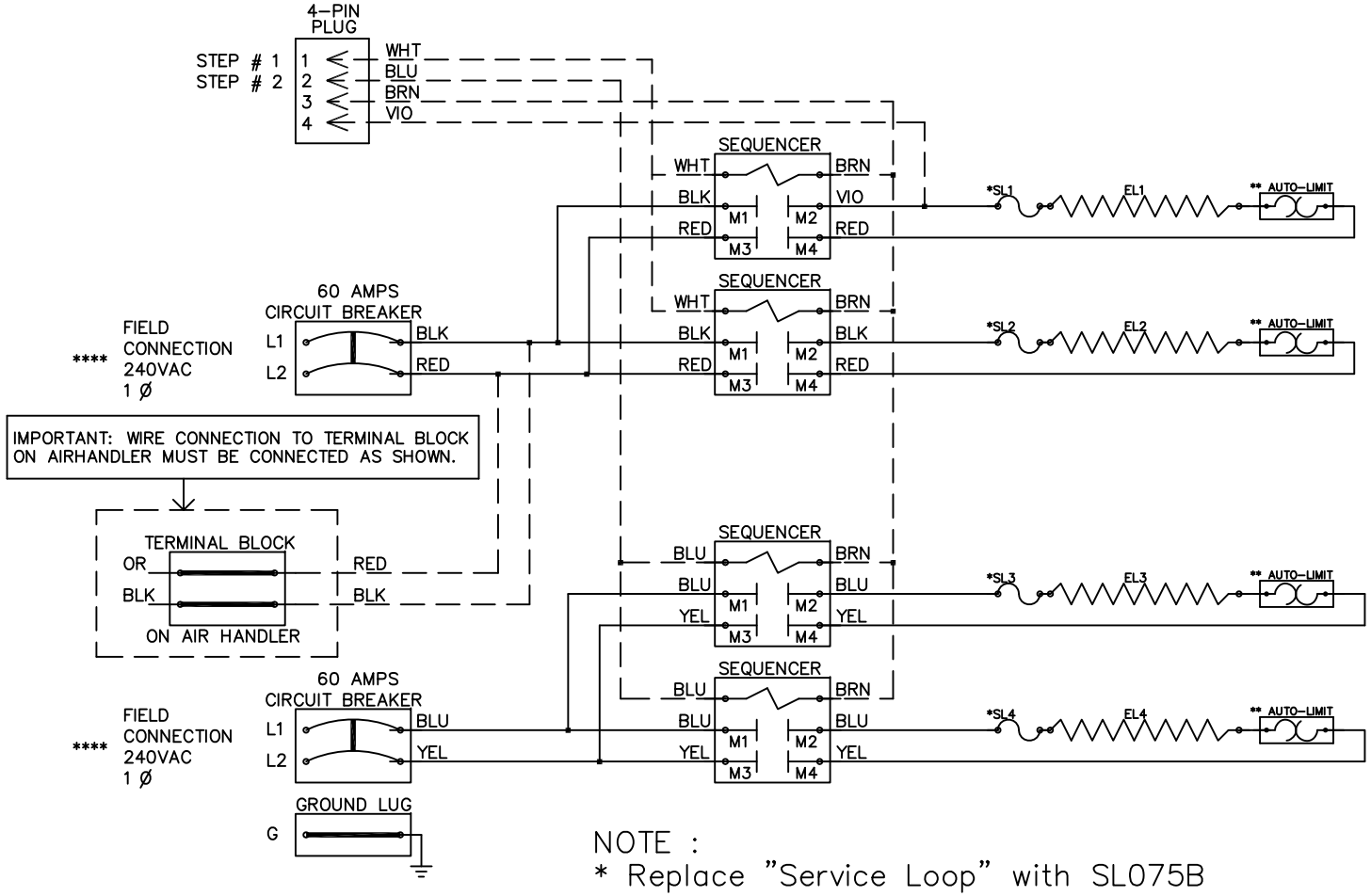

NOTE :
* Replace "Service Loop" with SL075B
** Replace Auto-Reset with Therm-O-Disc type 60TX11-L165.
*** Relays utilize 22VDC coils with AC to DC rectifiers. Do not use relay without rectifier. 24VAC, Class 2 power source must not exceed 26.4VAC under any primary input voltage condition per UL/NEC.
**** Power supply wiring per NEC & Local Codes. Suitable for at least 75°C. Use copper conductor wiring only.

Model	WRX-2002BX
Serial #	
Tag -	
Kilowatts	19.20
Volts-Ph-Hz	240/1/60
Control Volts	24.0
Steps	2
Heater Amps	40.00/40.00
Circuit Breakers	60/60

Control Wiring - - - - - - - - -
Power Wiring _____
Field Wiring _____

WRX2002BX

Rev. by : M. REEVES
Date : 02/27/15

WARREN TECHNOLOGY