WZH — 1502S

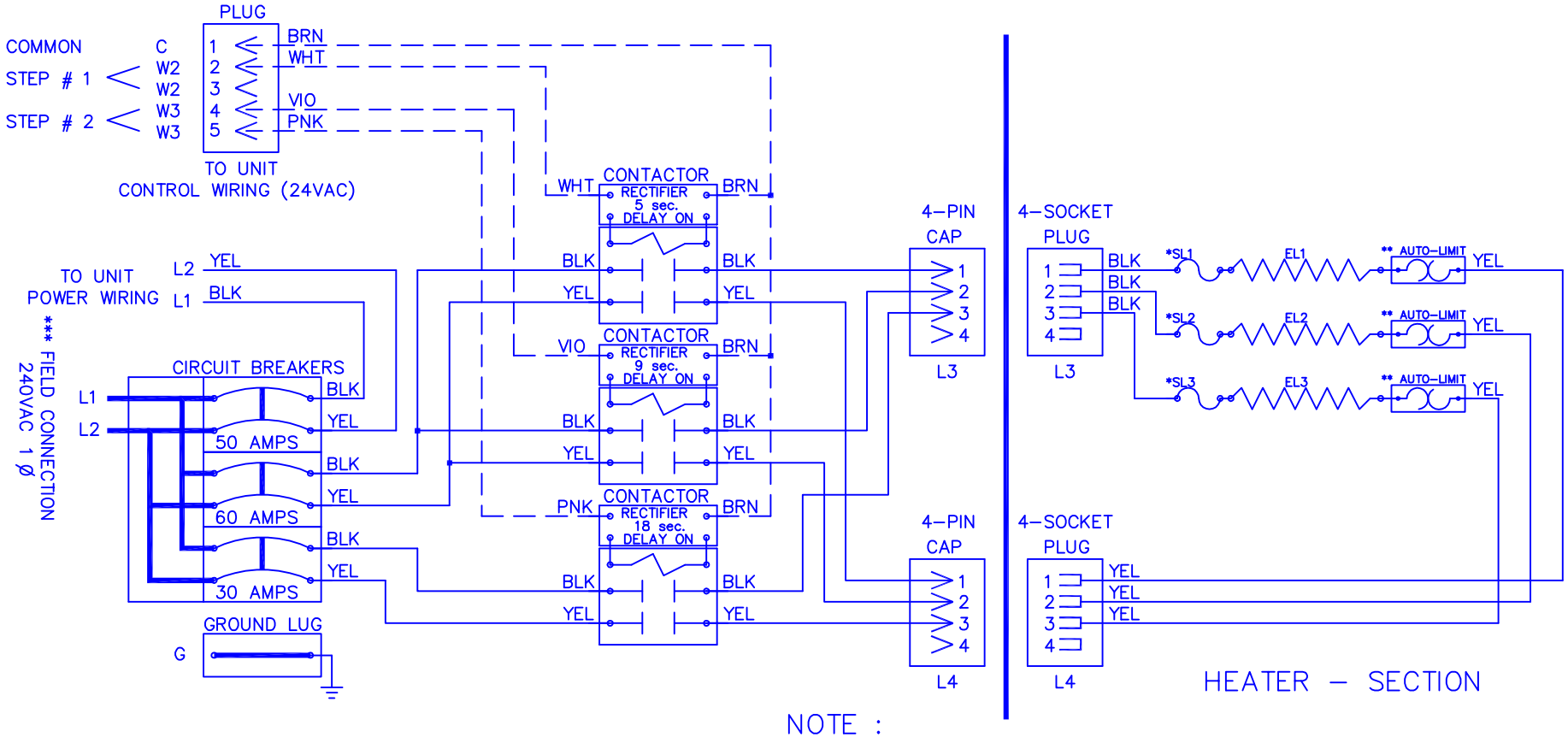

NOTE :
* Replace "Service Loop" with SL-075B
** Replace Auto-Reset with Therm-O-Disc type 60TX11-L165.
*** Power supply wiring per NEC & Local Codes. Suitable for at least 75°C.
Use copper conductor wiring only.
Relays utilize 22VDC coils with AC to DC rectifiers.
Do not use relay without rectifier.
Replace with factory authorized parts only.
24VAC, Class 2 power source must not exceed 26.4VAC under any primary input voltage condition per UL/NEC.

Model	WZH-1502S
Serial #	
Tag -	
Kilowatts	15.00
Volts-Ph-Hz	240/1/60
Control Volts	24.0
Steps	2
Heater Amps	62.50
Circuit Breakers	30/60/50

Control Wiring _____
Power Wiring _____
Field Wiring _____

WZH1502S

Rev. by : M. REEVES
Date : 02/27/15

WARREN TECHNOLOGY