WKF — 1131/1502

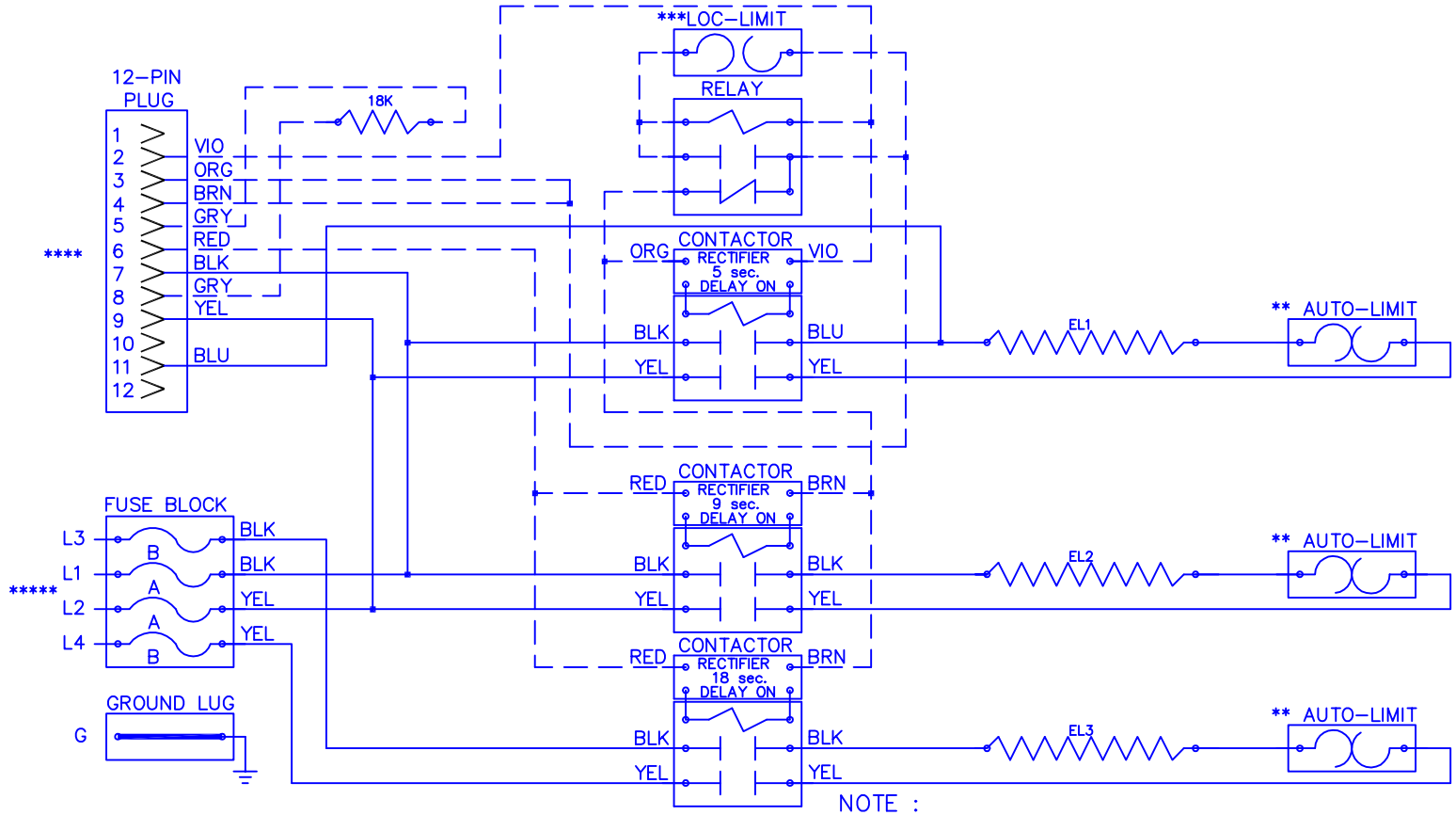

NOTE :
CAUTION – Contactors utilize 22–28VDC coils with AC to DC rectifiers. Do not use contactor without rectifier. Replace with factory authorized parts only.
–Contactor must always utilize AC–DC Rectifier with Time Delay as shown.
** Replace Auto–Reset with Therm–O–Disc type 60TX11–L165.
*** Replace Lock–Out Limit with 36TXV12 – 150°C
To Reset Lock–Out Limit, Cycle Power To The Heater With Either The Circuit Breaker Or The Thermostat.
**** 24VAC, Class 2 power source must not exceed 26.4VAC under any primary input voltage condition per UL/NEC.
***** Power supply wiring per NEC & Local Codes. Suitable for at least 75°C.
Use copper conductor wiring only.

Model	WKF–1131/1502
Serial #	
Tag –	
Kilowatts	11.3 / 13.8
Volts–Ph–Hz	208–230/1/60
Control Volts	24.0
Steps	2
Heater Amps	36.2–18.1/40.0–20.0

Control Wiring — — — — — — —
Power Wiring ————————
Field Wiring ————————

WKF1502

Rev. by : M. REEVES
Date: 07/19/18

WARREN TECHNOLOGY