WGS—1503H/1994H

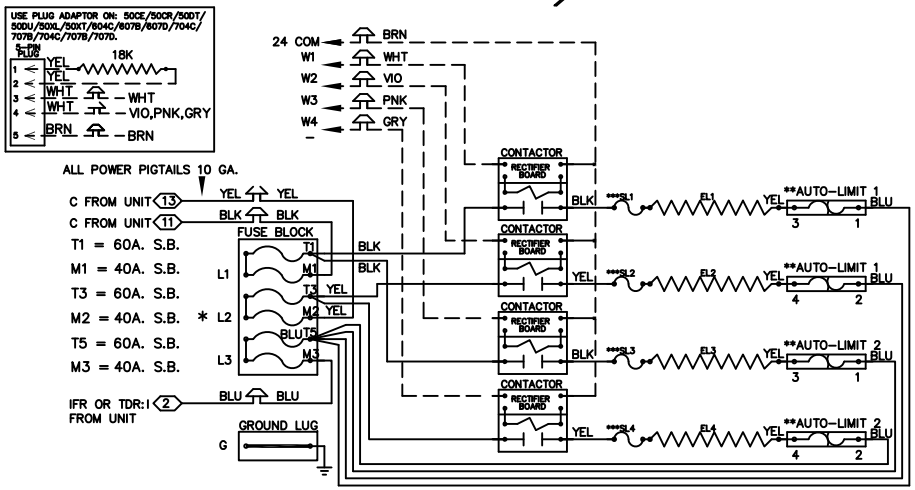

Model	WGS—1503H/1994H
Serial #	
Tag —	
Kilowatts	14.9/19.9
Volts—Ph—Hz	208/240/3/60
Control Volts	24.0
Steps	2
Heater Amps	41.4/47.9
Heater Fuses	See chart above
Control Wiring	
Power Wiring	
Field Wiring	

NOTE :
* Power supply wiring per NEC & Local Codes.
Suitable for at least 75° C
Use copper conductor wiring only.
Field wire, NEC Class I
** Replace Auto—Reset with Therm—O—Disc type 60TX01—L165
*** Replace "Service Loop" with SL075B

CAUTION—RELAYS UTILIZE 22VDC COILS WITH AC TO DC RECTIFIERS. DO NOT USE RELAY WITHOUT RECTIFIER REPLACE WITH FACTORY AUTHORIZED PARTS ONLY.

—24VAC, Class 2 power source must not exceed 26.4VAC under any primary input voltage condition per U.L./NEC.
Replace with 250VAC type Slo—Blow fuses
SINGLE POINT CONNECTION

WGS1994H

Rev. by : M. REEVES
Date : 02/06/12

WARREN TECHNOLOGY

WGS—1503H/1994H

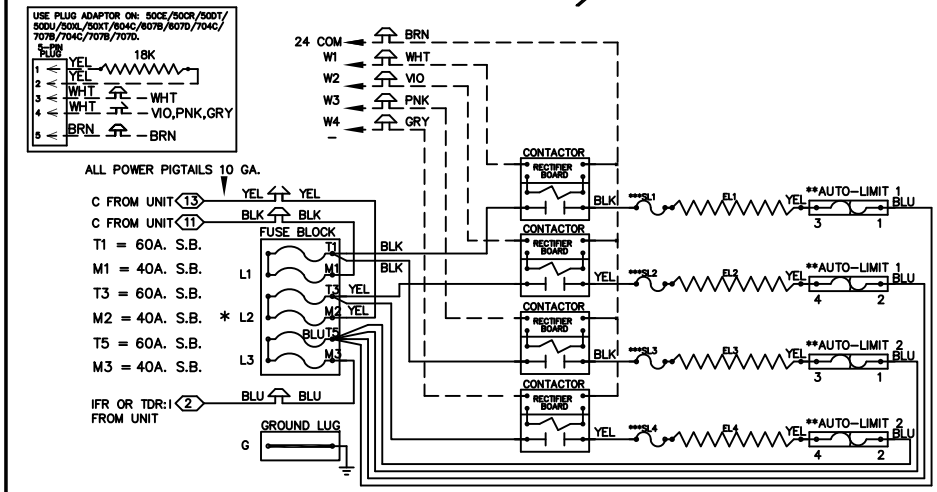

Model	WGS—1503H/1994H
Serial #	
Tag —	
Kilowatts	14.9/19.9
Volts—Ph—Hz	208/240/3/60
Control Volts	24.0
Steps	2
Heater Amps	41.4/47.9
Heater Fuses	See chart above
Control Wiring	
Power Wiring	
Field Wiring	

NOTE :
* Power supply wiring per NEC & Local Codes.
Suitable for at least 75° C
Use copper conductor wiring only.
Field wire, NEC Class I
** Replace Auto—Reset with Therm—O—Disc type 60TX01—L165
*** Replace "Service Loop" with SL075B

CAUTION—RELAYS UTILIZE 22VDC COILS WITH AC TO DC RECTIFIERS. DO NOT USE RELAY WITHOUT RECTIFIER REPLACE WITH FACTORY AUTHORIZED PARTS ONLY.

—24VAC, Class 2 power source must not exceed 26.4VAC under any primary input voltage condition per U.L./NEC.
Replace with 250VAC type Slo—Blow fuses
SINGLE POINT CONNECTION

WGS1994H

Rev. by : M. REEVES
Date : 02/06/12

WARREN TECHNOLOGY